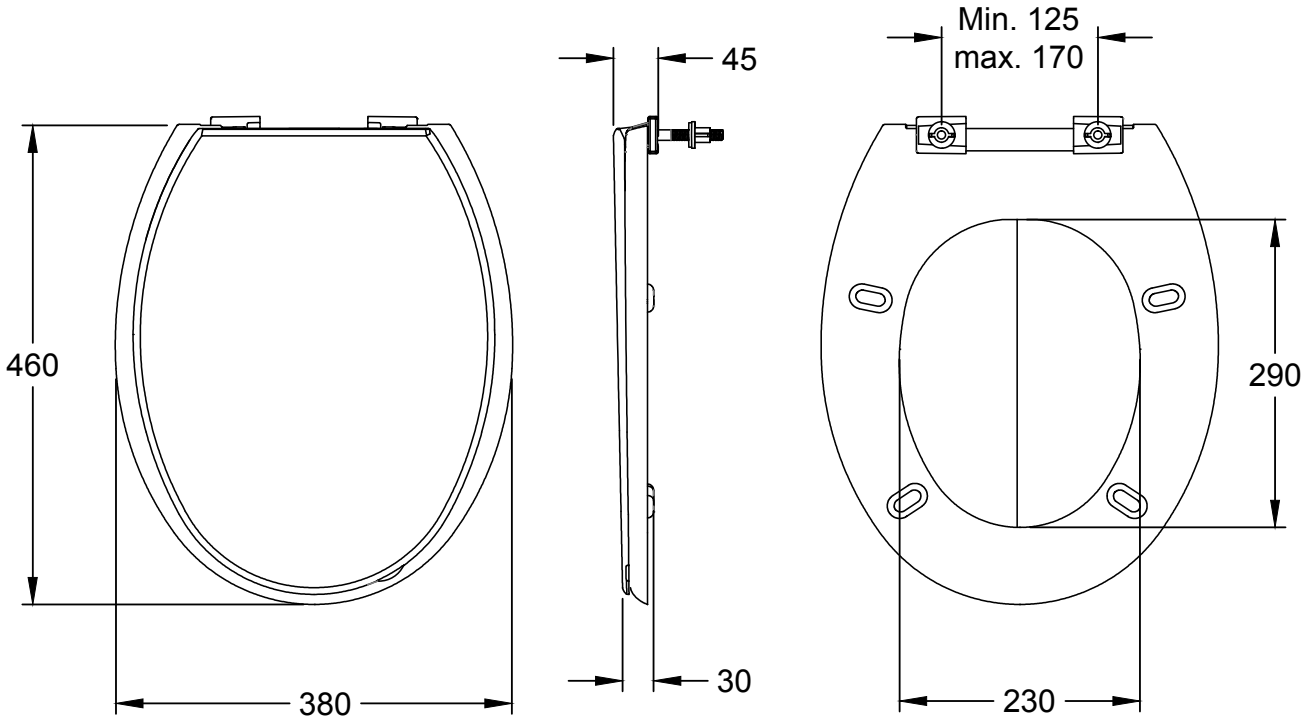

Johnson Pedder
The smarter choice.

ALL DIMENSIONS IN MM	PRODUCT	MATERIAL	SCALE
—	CLASSIC PLUS SEAT COVER	PP	—
		MATERIAL NO.	SHEET
		E8345	1/1