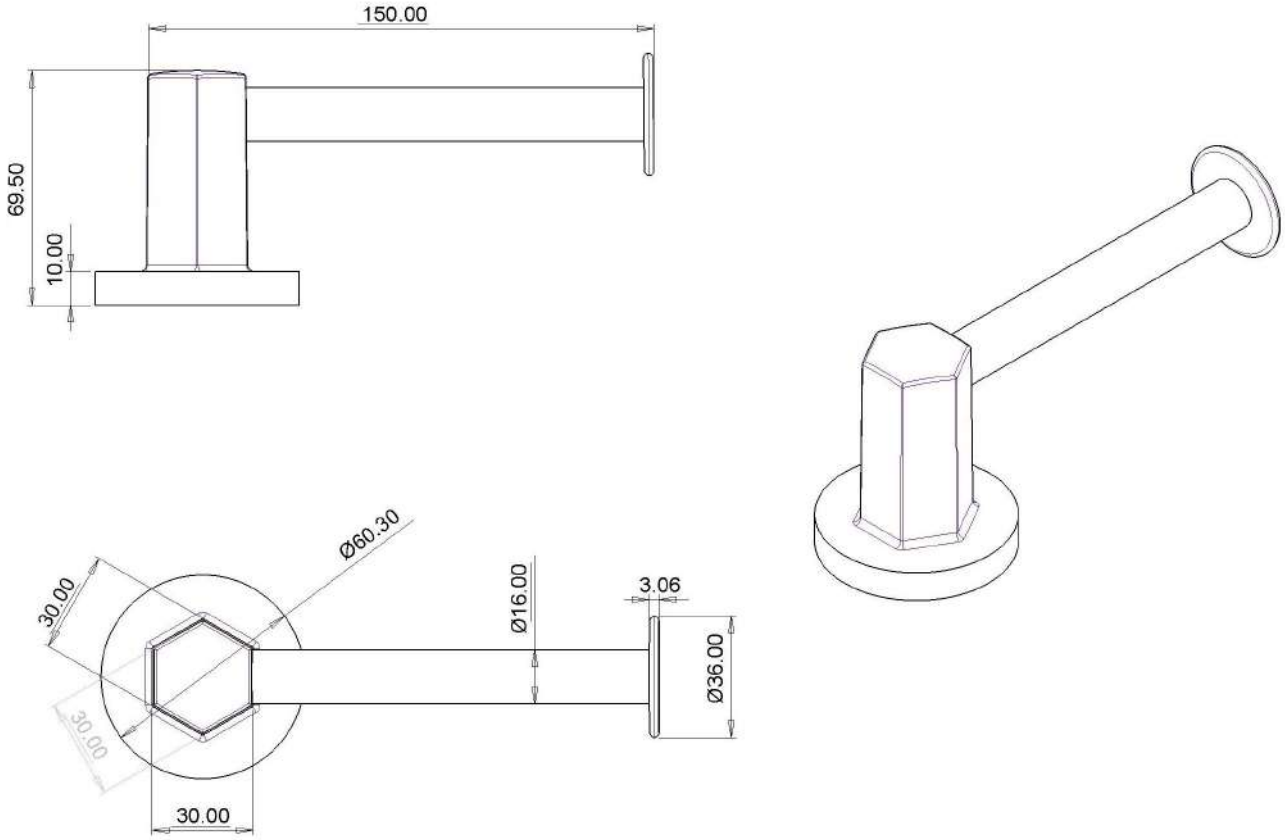

Johnson Pedder
The smarter choice.

ALL DIMENSIONS IN MM	PRODUCT	MATERIAL	SCALE
-	HEXA PAPER HOLDER	—	—
		MATERIAL NO.	SHEET
		JA7006	1/1